

SECTION A-A

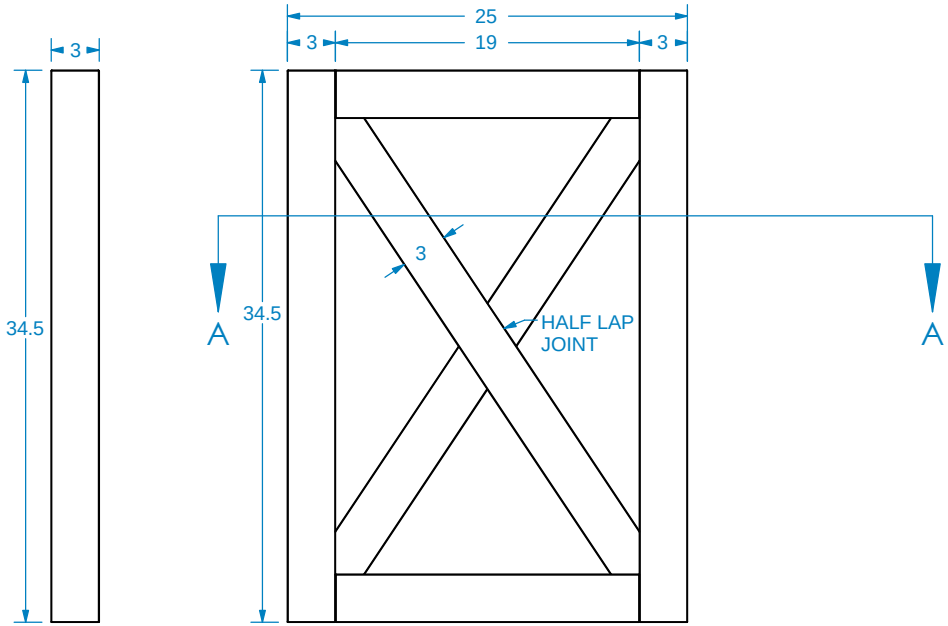

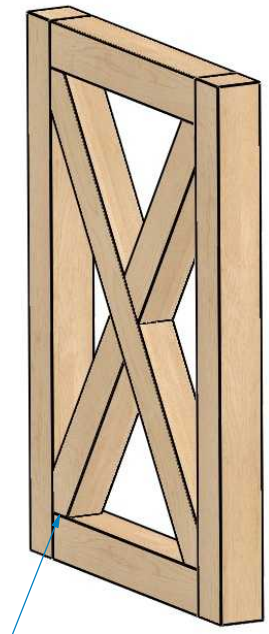

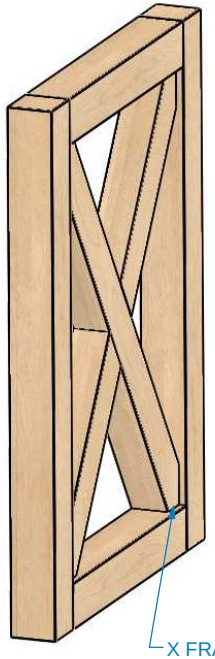

Designs of distinction® by Brown Wood, Inc. est. 1927

REVISION HISTORY		
REV	REV DATE	DESCRIPTION

TOLERANCES	
WIDTH	± .03125"
THICKNESS	± .03125"
LENGTH	± .0625"
ANGULAR	± x.x°
PROFILE	± x.xxx"

Use General Tolerances Unless Noted

AVAILABLE WOOD SPECIES

(AK) RED OAK (AL) ALDER (CH) CHERRY
(HM) HARD MAPLE

NOTES: ADDITIONAL SPECIES AVAILABLE

Do not scale. Use dimensions only. All dimensions are in inches unless noted

TITLE: 25" FARMHOUSE END PANEL 3" THICK

NOMINAL SIZE
25" X 3" X 34.5"

DWG #: **01XPNL3025-1** REV:

DATE: 2/4/2026 SCALE: 1:12

PROPRIETARY AND CONFIDENTIAL THESE DRAWINGS AND SPECIFICATIONS ARE THE PROPERTY OF BROWN WOOD INC. AND ARE ISSUED IN STRICT CONFIDENCE AND SHALL NOT BE REPRODUCED OR COPIED OR USED AS THE BASIS FOR THE MANUFACTURE OR SALE OF APPARATUS WITHOUT PRIOR WRITTEN PERMISSION.