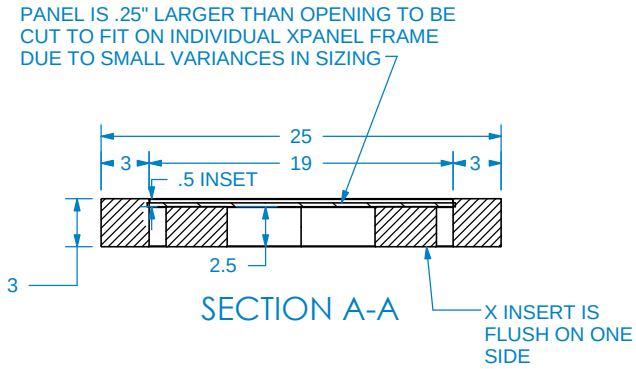

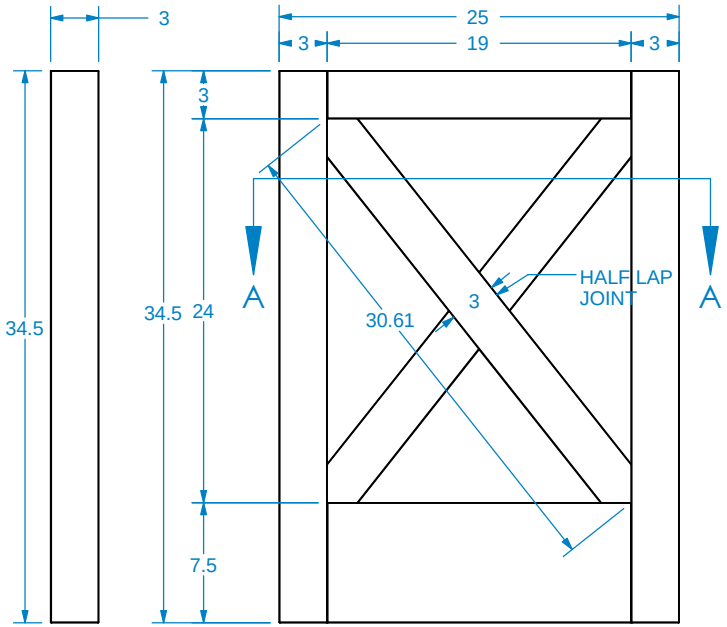

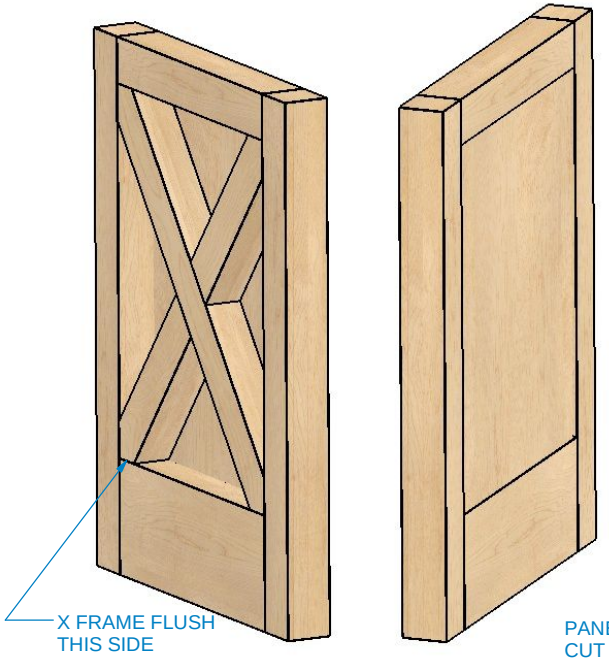

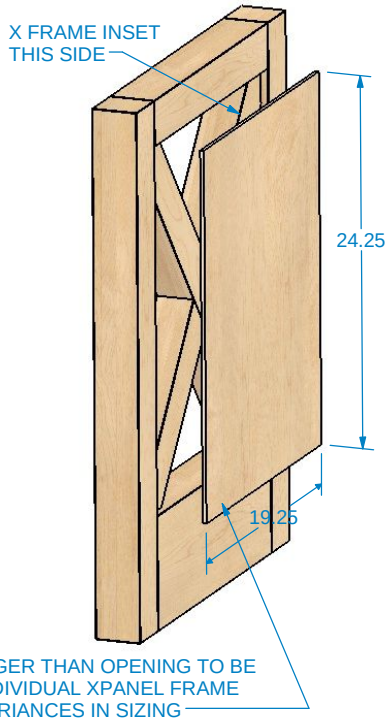

Designs of distinction® by Brown Wood, Inc. est. 1998

REVISION HISTORY		
REV	REV DATE	DESCRIPTION

TOLERANCES	
WIDTH	± .03125"
THICKNESS	± .03125"
LENGTH	± .0625"
ANGULAR	± x.x°
PROFILE	± x.xxx"

Use General Tolerances Unless Noted

MATERIALS AND FINISHES

PLEASE VISIT OUR WEBSITE FOR A COMPLETE LIST.
www.brownwoodinc.com
1-800-328-5858

NOTES:

Do not scale. Use dimensions only. All dimensions are in inches unless noted

TITLE: 3 X 25 TRIMMABLE ISLAND END PANEL WITH BACKER

NOMINAL SIZE
25" X 3" X 34.5"

DWG #: **01XPN3025LNG-4** REV:

DATE: 2/8/2023 SCALE: 1:12

PROPRIETARY AND CONFIDENTIAL THESE DRAWINGS AND SPECIFICATIONS ARE THE PROPERTY OF BROWN WOOD INC. AND ARE ISSUED IN STRICT CONFIDENCE AND SHALL NOT BE REPRODUCED OR COPIED OR USED AS THE BASIS FOR THE MANUFACTURE OR SALE OF APPARATUS WITHOUT PRIOR WRITTEN PERMISSION.