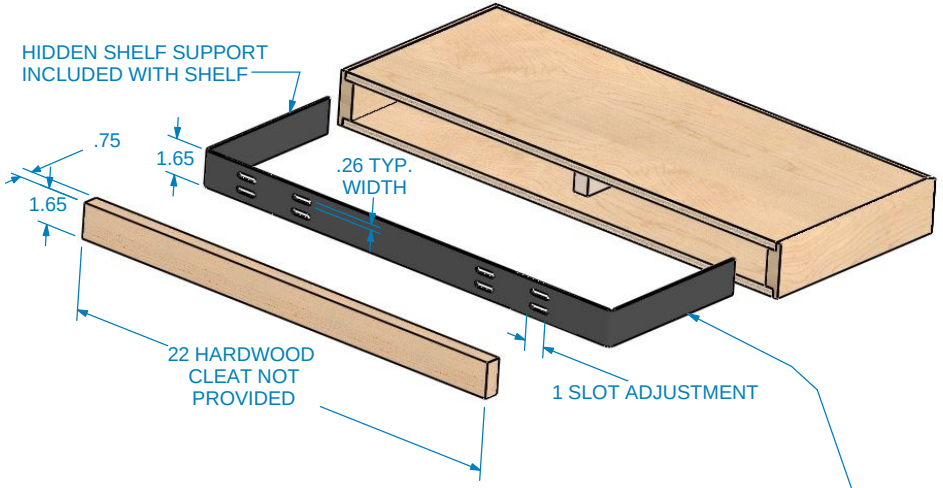

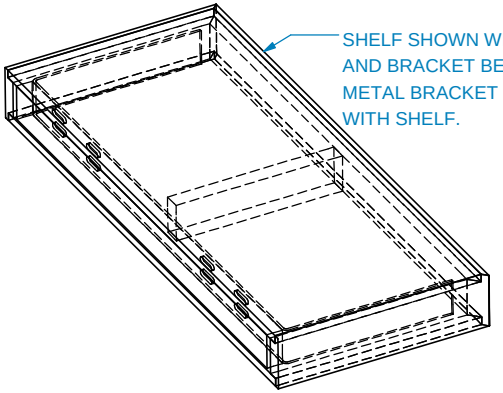

HARDWOOD CLEAT (NOT INCLUDED) MAY BE USED BETWEEN WALL AND BRACKET. ATTACH BRACKET TO CLEAT OR WALL DEPENDING ON WHETHER A CLEAT HAS BEEN USED. THEN SLIDE SHELF OVER BRACKET USING PANEL GLUE TO FASTEN SHELF INTO PLACE OR PIN NAIL SHELF INTO CLEAT

MURPHY PLYWOOD TOTARY CUT VENEER
USED ON TOPS AND BOTTOMS OF SHELVES

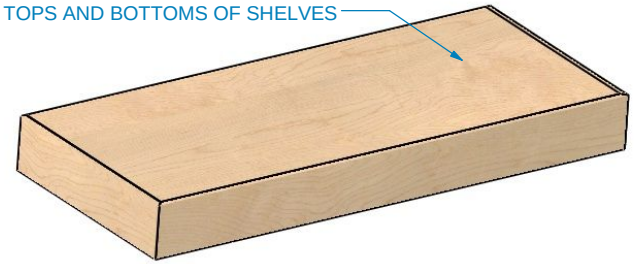

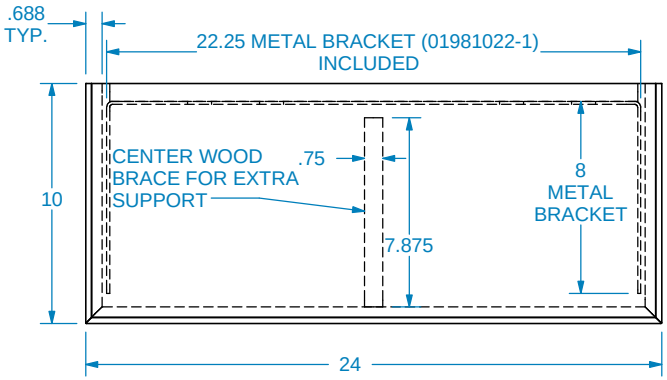

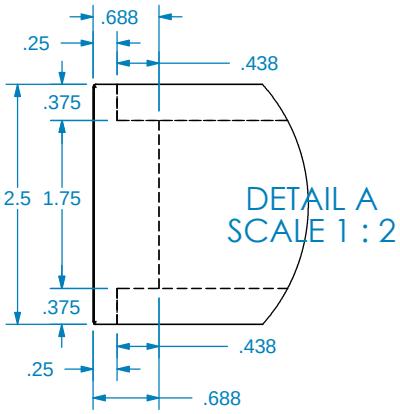

DETAIL A
SCALE 1 : 2

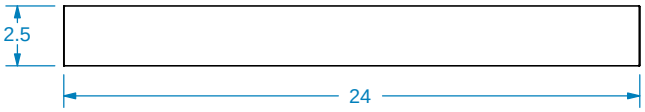

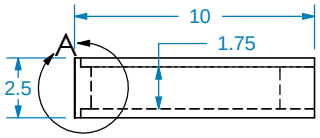

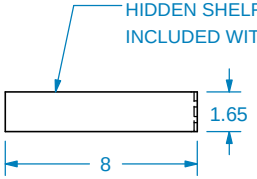

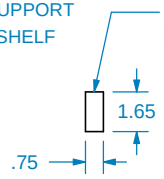

Designs of distinction® by Brown Wood, Inc. est. 1998

REVISION HISTORY		
REV	REV DATE	DESCRIPTION
A	8-22-2019	CHANGED TO 2.5" THICK FROM 2.625"
B	2-4-2020	CHANGED EDGES TO .688 THICK

TOLERANCES	
WIDTH	± .03125"
THICKNESS	± .03125"
LENGTH	± .0625"
ANGULAR	± x.x°
PROFILE	± x.xxx"

Use General Tolerances Unless Noted

MATERIALS AND FINISHES

PLEASE VISIT OUR WEBSITE FOR A COMPLETE LIST.
www.brownwoodinc.com
1-800-328-5858

NOTES:

Do not scale. Use dimensions only. All dimensions are in inches unless noted

TITLE: 10" X 24" MODERN FLOATING SHELVES

NOMINAL SIZE
24" X 10" X 2.5"

DWG #: **01MFL102410-1** REV: A

DATE: 2/4/2020 SCALE: 1:8

PROPRIETARY AND CONFIDENTIAL THESE DRAWINGS AND SPECIFICATIONS ARE THE PROPERTY OF BROWN WOOD INC. AND ARE ISSUED IN STRICT CONFIDENCE AND SHALL NOT BE REPRODUCED OR COPIED OR USED AS THE BASIS FOR THE MANUFACTURE OR SALE OF APPARATUS WITHOUT PRIOR WRITTEN PERMISSION.