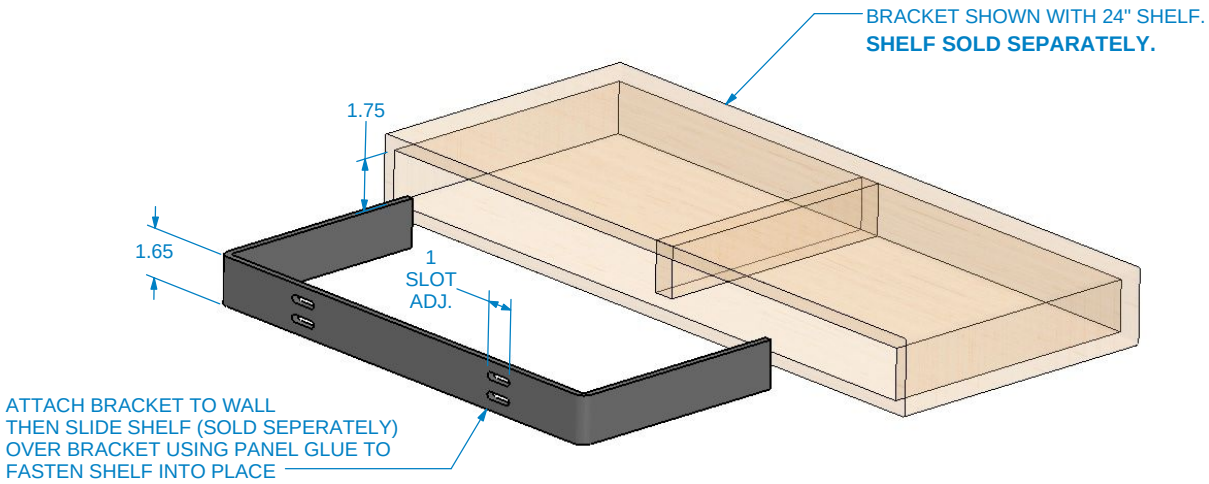


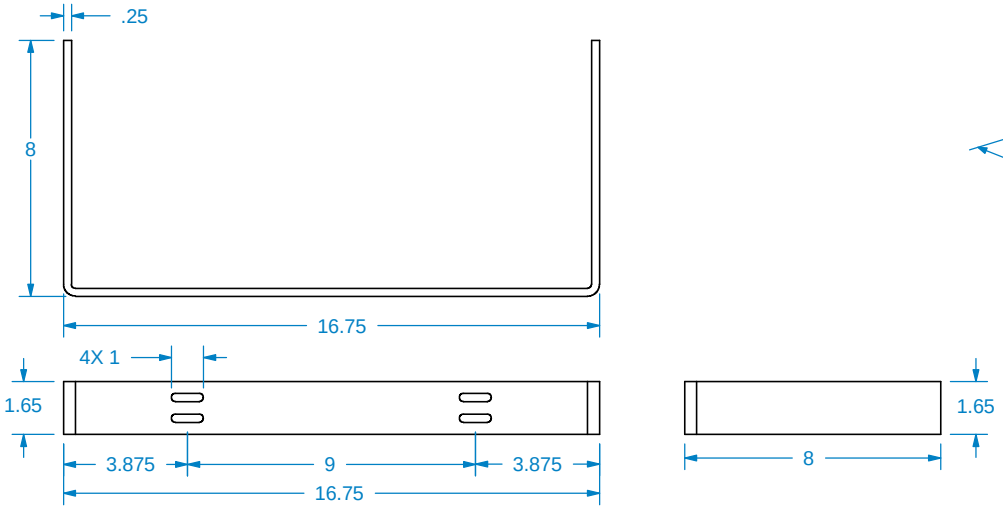


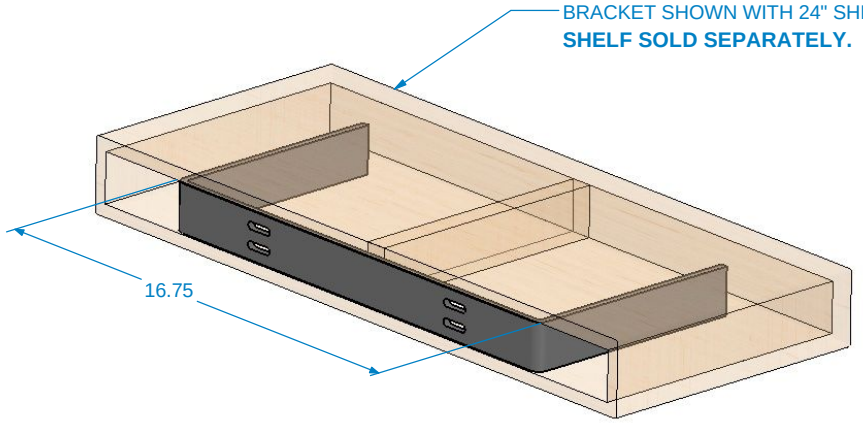


| REVISION HISTORY | | |
|---|---|---|
| REV | REV DATE | DESCRIPTION |
| A | 3-1-2023 | CHANGED HOLES TO 1" SLOTS |

| TOLERANCES | |
|---|---|
| WIDTH | ± .03125" |
| THICKNESS | ± .03125" |
| LENGTH | ± .0625" |
| ANGULAR | ± x.x° |
| PROFILE | ± x.xxx" |

Use General Tolerances Unless Noted

MATERIALS AND FINISHES

PLEASE VISIT OUR WEBSITE FOR A COMPLETE LIST.
**www.brownwoodinc.com**
1-800-328-5858

NOTES: JAN 2020 - NEW VENDOR

Do not scale. Use dimensions only. All dimensions are in inches unless noted

TITLE: 16" HIDDEN SHELF SUPPORT

NOMINAL SIZE
16.75" X 8" X 1.65"

DWG #: **01980116-1** REV: A

DATE: 3/1/2023 SCALE: 1:6

PROPRIETARY AND CONFIDENTIAL THESE DRAWINGS AND SPECIFICATIONS ARE THE PROPERTY OF BROWN WOOD INC. AND ARE ISSUED IN STRICT CONFIDENCE AND SHALL NOT BE REPRODUCED OR COPIED OR USED AS THE BASIS FOR THE MANUFACTURE OR SALE OF APPARATUS WITHOUT PRIOR WRITTEN PERMISSION.